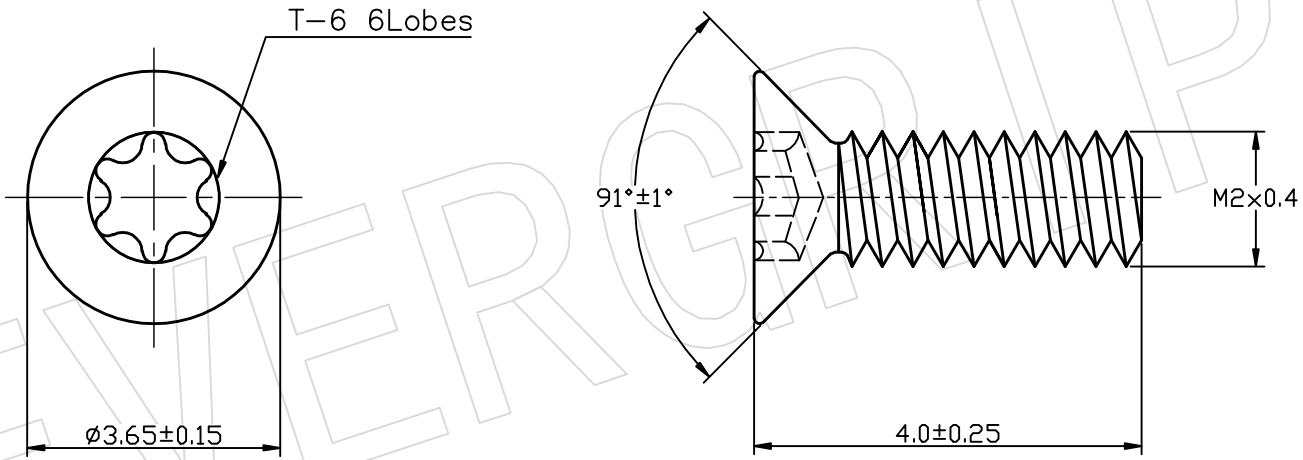

EVERGRIP

REVISION		
NO.	DATE	E.C.N.

MATERIAL(材料):
STEEL C1022A

HEAT TREATMENT(热处理):

FINISH(表面处理):
BLUE ZINC CR3
(三价蓝锌)

CUSTOMER PART NO:

PART NO(料号):
3C020M040F20

DESCRIPTION:

Taicang Evergrip Industrial Co.,Ltd
太仓永固精密制件有限公司
Email:sales@evergrip.com.cn
Tel:0512-53573515 15250592453(微信)

DRAWN	CHK'D

UNIT: MM	REVISION: A	TOLERANCES		DWG NO: E00484
SCALE: NTS	PAPER SIZE: A4	SIZE		
		ANGLE		